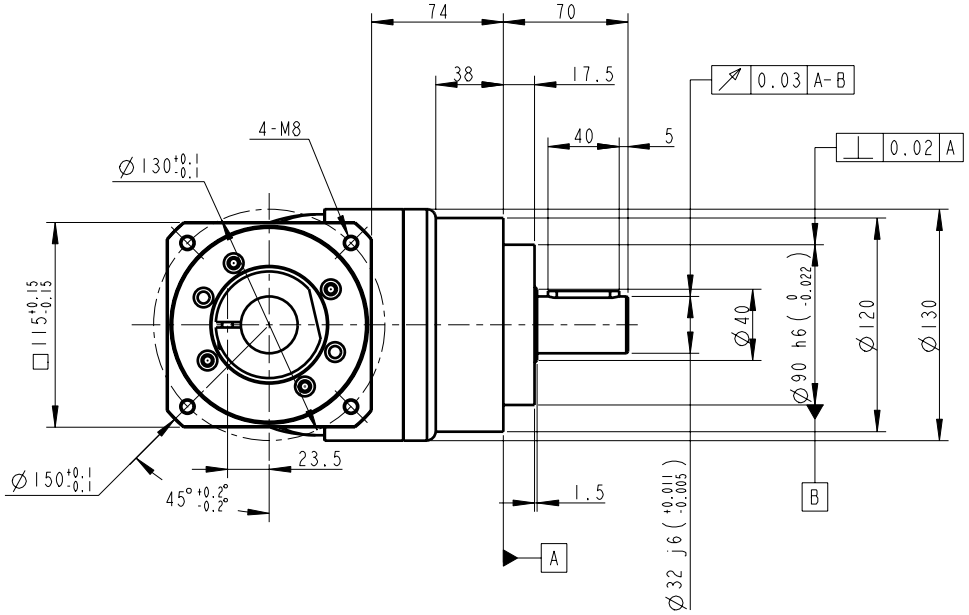

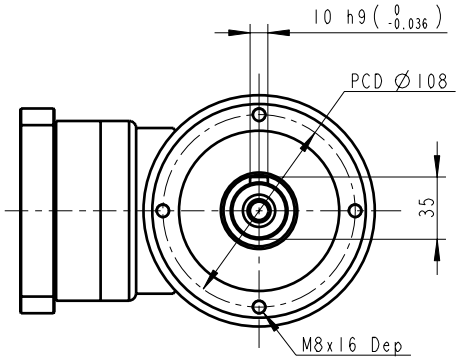

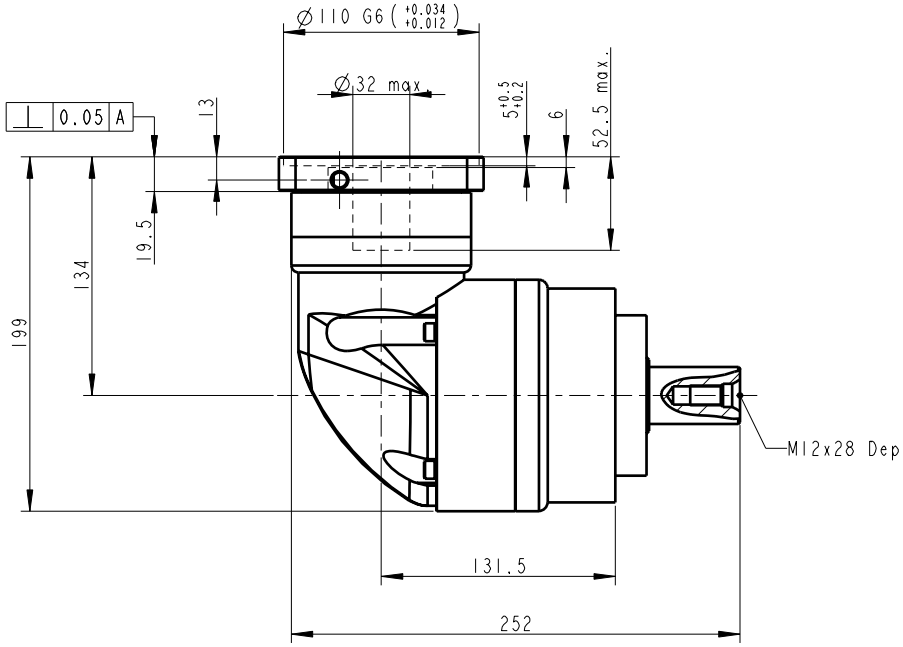

INERTIA: 6.25~6.84 kg-cm^2
MASS: 11.2 kg

BACKLASH: <=10 arcmin

BUSHING SUPPLIED WHEN MOTOR SHAFT DIAMETER SMALL THAN Ø32
Old Part No. AER1201-P4140301

PART NO. AER1201-P0403401001 AER120-1, AD-P110-M115-1		APEX DYNAMICS, INC.			
APPROVALS	DATE	TITLE AER-120 1 Stage, Ratio=3~10 AND MOTOR FLANGE MOUNTING			
DRAWN Cindy	05-Sep-08				
CHECKED		DWG NO. AER1201-P0403401001			
APPROVED			SIZE A0	SCALE 1:1	REV 1.0