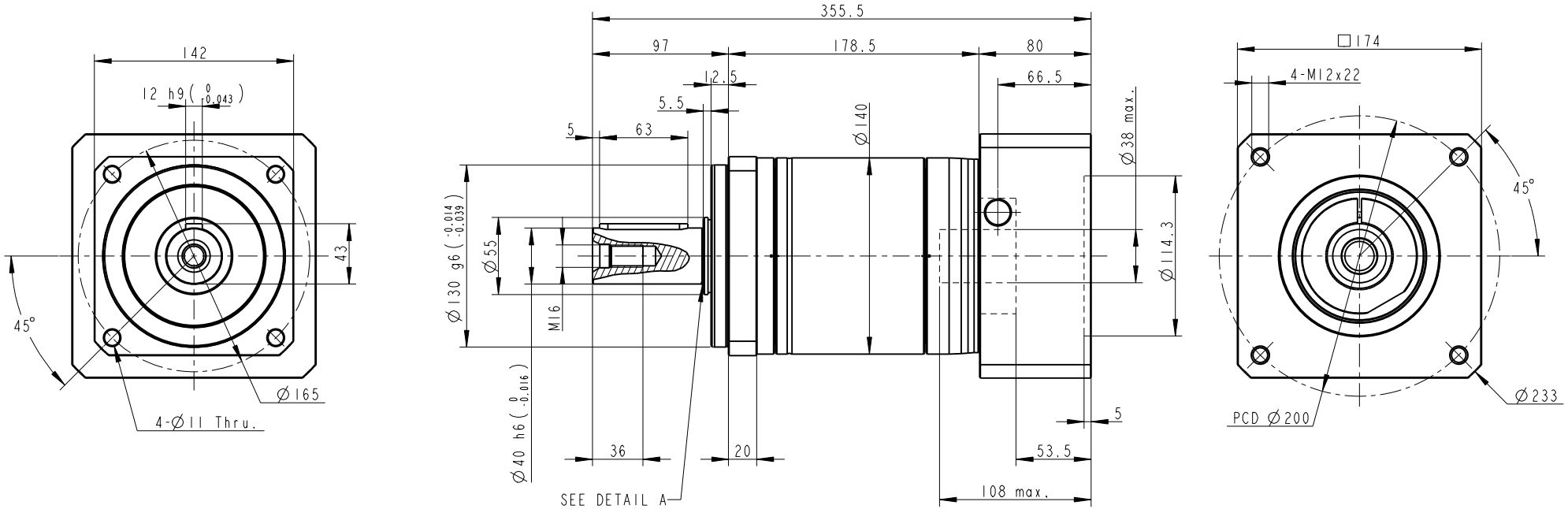

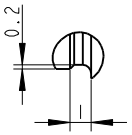

DETAIL A
SCALE 12:1

INERTIA: 14.96 ~ 17.2 kg-cm^2
MASS: 20.9 Kg

PART NO. PA2-142_2ST_38-P0411900101 AD-PE2-S38-M174-1		APEX DYNAMICS, INC.
APPROVALS	DATE	TITLE PA2-142_2 Stages_S38 , RATIO= 12~100 AND MOTOR FLANGE MOUNTING
DRAWN 馬俊志		DWG NO. PA2-142_2ST_38-P0411900101
CHECKED		
APPROVED		SIZE A0 / SCALE 1:1 / REV