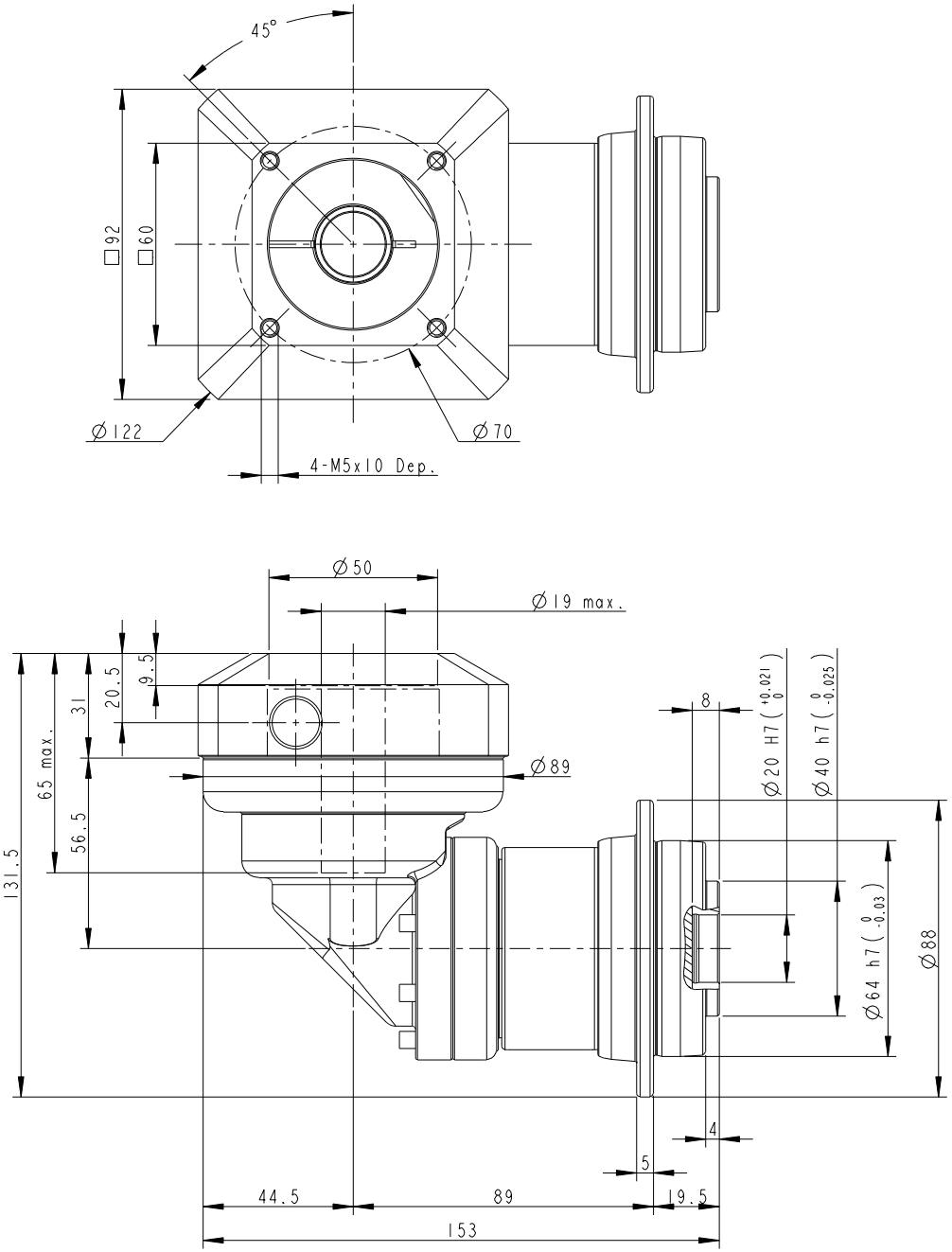

PART NO. PDR064_2ST_19-P0411400101 AD-PE2-S19-M60-1		APEX DYNAMICS, INC.
APPROVALS	DATE	TITLE PDR064_2 Stage_S19 , RATIO= 15~100 AND MOTOR FLANGE MOUNTING
DRAWN 沈正義		DWG NO. PDR064_2ST_19-P0411400101
CHECKED		
APPROVED		SIZE A2 / SCALE 1:1 / REV