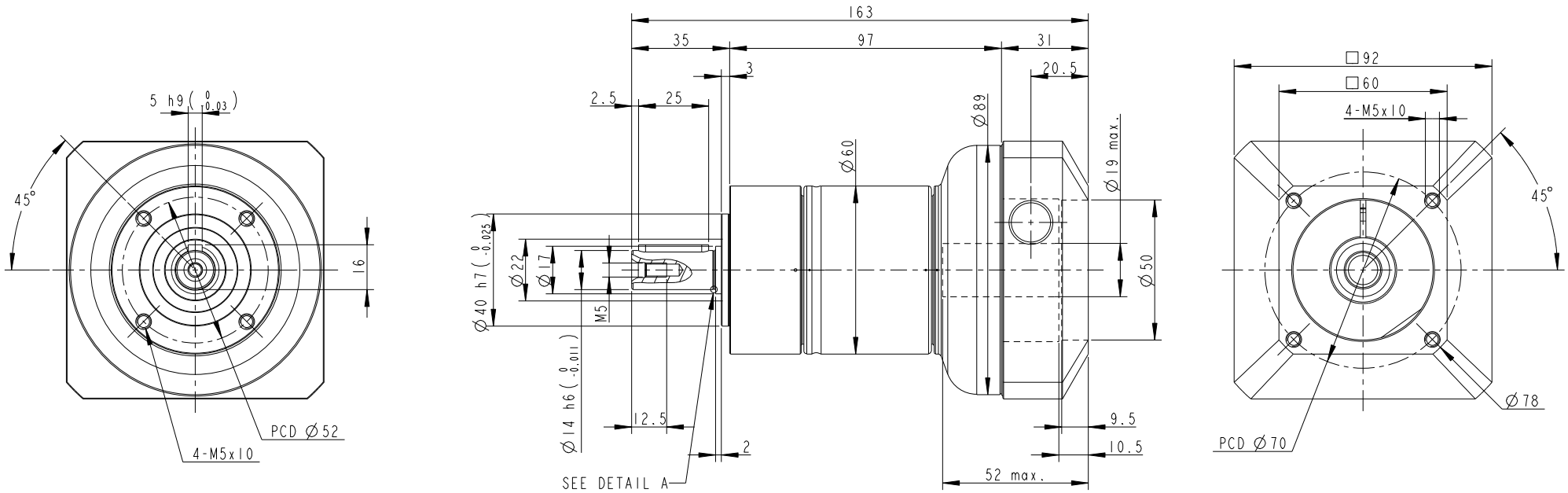

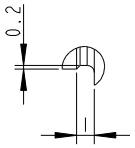

DETAIL A
SCALE 5:1

INERTIA: 0.02 ~ 0.02 kg-cm^2
MASS: 1.7 Kg

PART NO. PG2-060_2ST_19-P0411400101 AD-PE2-S19-M60-1		APEX DYNAMICS, INC.
APPROVALS	DATE	TITLE PG2-060_2 Stages_S19 , RATIO= 12~100 AND MOTOR FLANGE MOUNTING
DRAWN Sussie		DWG NO. PG2-060_2ST_19-P0411400101
CHECKED		
APPROVED		SIZE A2 / SCALE 1:1 / REV