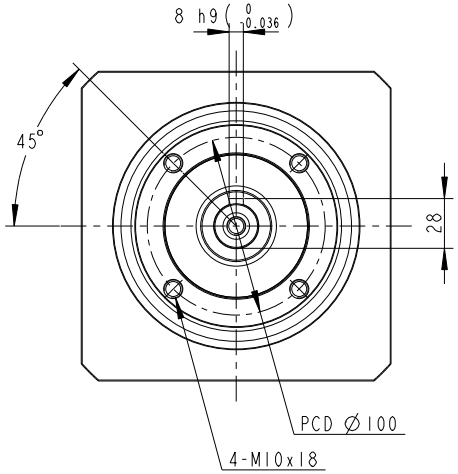

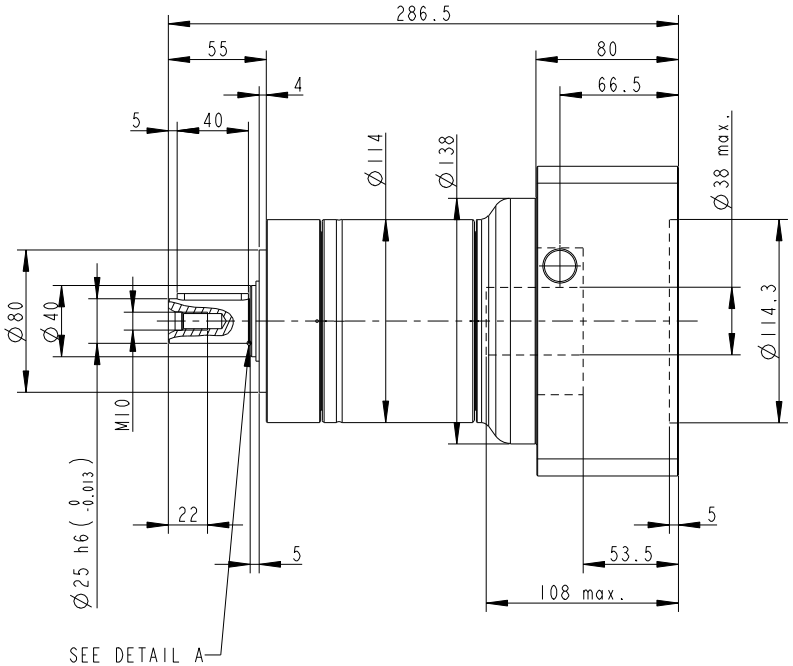

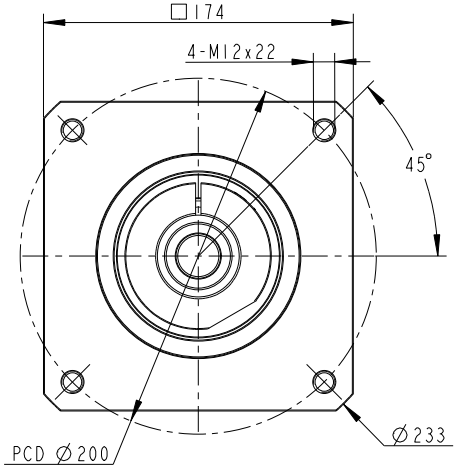

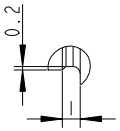

DETAIL A
SCALE 10:1

INERTIA: 1.36 ~ 1.37 kg-cm^2
MASS: 12.9 Kg

PART NO. PG2-120_2ST_38-P0411900101 AD-PE2-S38-M174-1		APEX DYNAMICS, INC.
APPROVALS	DATE	TITLE PG2-120_2 Stages_S38 , RATIO= 12~100 AND MOTOR FLANGE MOUNTING
DRAWN Sussie		DWG NO. PG2-120_2ST_38-P0411900101
CHECKED		
APPROVED		SIZE A0 / SCALE 1:1 / REV