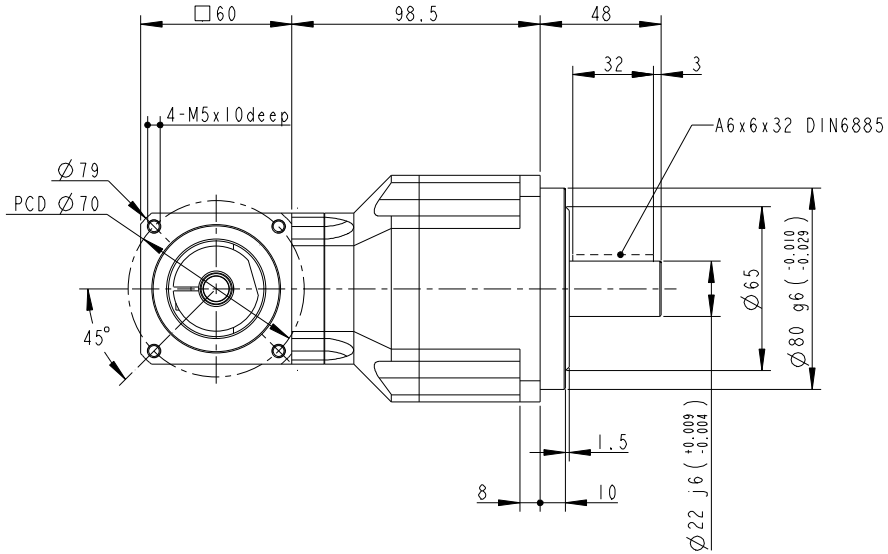

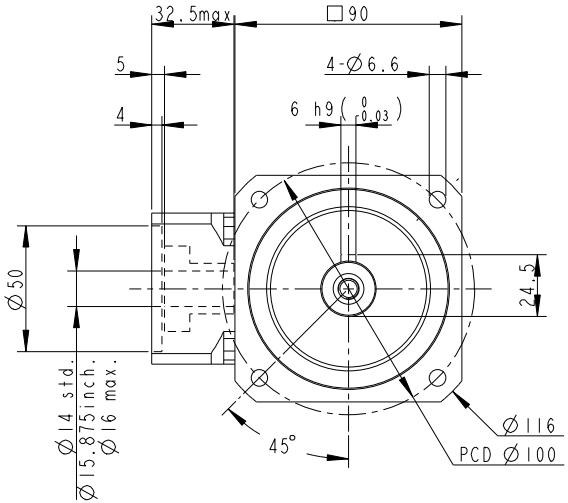

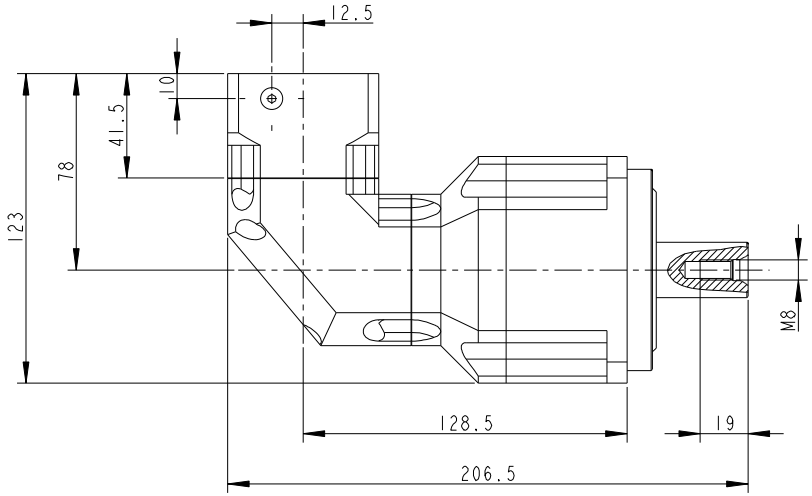

INERTIA: 0.31~0.35 kg-cm^2
MASS: 7.8 Kg

SHAFT OPTION S1: SMOOTH OUTPUT SHAFT(STANDARD)
SHAFT OPTION S2: OUTPUT SHAFT WITH KEYWAY
MICRO BACKLASH <= 4 arcmin
REDUCED BACKLASH<= 7 arcmin
STANDARD BACKLASH<= 9 arcmin

***BUSHING SUPPLIED WHEN MOTOR SHAFT DIAMETER SMALL THAN Ø16

Old Part No. ABR0902-P4020102

PART NO. ABR0902-P0401200402 ABR090-2, AD-W60-M60-2		APEX DYNAMICS, INC.
APPROVALS	DATE	TITLE ABR090 2 STAGES, RATIO= 25~200 AND STANDARD FLANGE MOUNTING
DRAWN 江淑惠		DWG NO. ABR0902-P0401200402
CHECKED		
APPROVED		SIZE A1 / SCALE 1:1 / REV 2.0